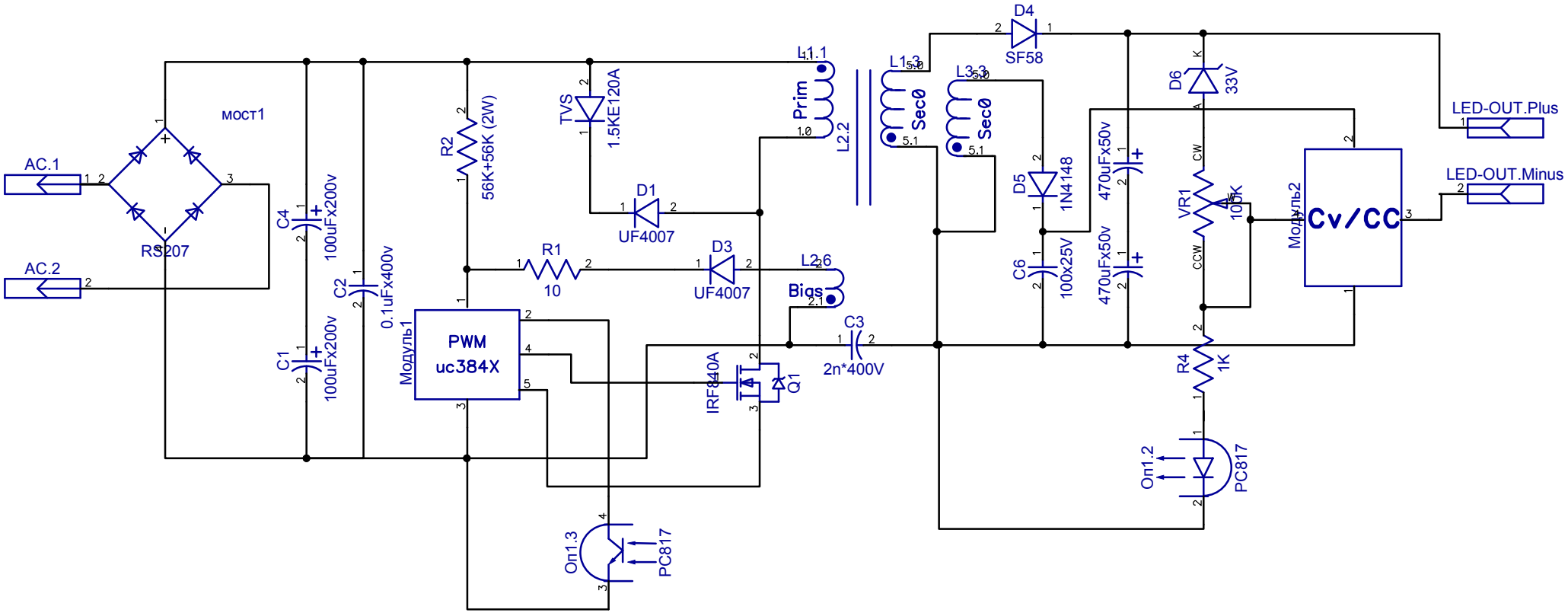
AC.1
AC.2
мост1
RS207
C1
100uFx200v
C4
100uFx200v
C2
0.1uFx400v
Модуль1
PWM
uc384X
R2
56K+56K (2W)
R1
10
TVS
1.5KE120A
D1
UF4007
D3
UF4007
Prim
L1.1
L2.2
L2.6
Bias
IRF840A
Q1
C3
2n*400V
Оп1.3
PC817
L1.3
Sec0
L3.3
Sec0
D4
SF58
D5
1N4148
C6
100x25V
470uFx50v
470uFx50v
D6
33V
VR1
100K
R4
1K
Оп1.2
PC817
Модуль2
Cv/CC
LED-OUT.Plus
LED-OUT.Minus